Electrolux PROFESSIONAL

SkyLine ChillS Blast Chiller-Freezer 6GN1/1 30/30 kg with UV lamp

ITEM #

MODEL #

NAME #

SIS #

AIA #

727783 (EBFA61UTE)

Skyline ChillS Blast Chiller Freezer 30/30kg, 6 GN 1/1 or 600x400mm (12 levels pitch 30mm) with touch screen control, Top and UV lamp

Short Form Specification

Item No.

- Blast chiller freezer with high resolution full touch screen interface, multilanguage
- For 6 GN 1/1 or 600x400 mm trays. Up to 9 ice cream basins of 5 kg (165x360x125h mm)
- Load capacity: chilling 30 kg; freezing 30 kg
- OptiFlow air distribution system to achieve maximum performance with 7 fan speed levels
- Chilling/Freezing modes: Automatic (10 food families with 100+ different pre-installed variants); Programs (a maximum 1000 programs can be stored and organized in 16 different categories); Manual (soft chilling, hard chilling, freezing, holding, turbo cooling and lite hot cycles); Specialistic Cycles (Cruise chilling, proving, retarded proving, fast thawing, Sushi&Sashimi, Sous-Vide chilling, ice-cream, yogurt and chocolate)
- Special functions: MultiTimer chilling/freezing, Make-it-Mine to customize interface, SkyHub to customize homepage, agenda MyPlanner, SkyDuo connection to SkyLine ovens
- Remaining time estimation for probe-driven cycles based on artificial intelligence techniques (ARTE 2.0)
- Automatic and manual defrosting and drying
- UV lamp for sterilizing cycle
- USB port to download HACCP data, programs and settings. Connectivity ready
- 3-point multi sensor core temperature probe
- Stainless steel construction throughout
- Internal rounded corners
- Built-in refrigeration unit
- R452a refrigerant gas
- Performance guaranteed at ambient temperatures of +43°C (Climatic class 5).

APPROVAL:

Main Features

- Blast Chilling cycle: 30 kg from +90°C up to + 3°C.
- X-Freeze cycle: ideal for blast freezing all kinds of food (raw, half or fully cooked).
- Lite-Hot cycle: ideal for soft heating preparations.
- Turbo cooling: chiller works continuously at the desired temperature; ideal for continuous production.
- Automatic mode including 10 food families (meat, poultry, fish, sauces and soup, vegetables, pasta/rice, bread, savory and sweet bakery, dessert, beverage fast cooling) with 100+ different pre-installed variants. Through Automatic Sensing Phase the blast chiller optimizes the chilling process according to size, quantity and type of food loaded to achieve the selected result. Real time overview of the chilling parameters. Possibility to personalize and save up to 70 variants per family.
- Cycles+:
  - Cruise Cycle (Patented EP1716769B1 and related family) automatically sets the parameters for the quickest and best chilling (it works with probe)
  - Proving
  - Retarded Proving
  - Fast Thawing
  - Sushi&Sashimi (anisakis-free food)
  - Chill Sous-vide
  - Ice Cream
  - Yogurt
  - Chocolate
- Programs mode: a maximum of 1000 programs can be stored in the blast chiller's memory, to recreate the exact same high standard at any time. The programs can be grouped in 16 different categories to better organize the menu. 16-step chilling programs also available.
- MultiTimer function to manage up to 20 different chilling cycles at the same time, improving flexibility and ensuring excellent results. Can be saved up to 200 MultiTimer programs.
- OptiFlow air distribution system to achieve maximum performance in chilling/heating eveness and temperature control thanks to a special design of the chamber combined with high precision variable speed fan.
- Fan with 7 speed levels. Fan stops in less than 5 seconds when door is opened.
- 3-point multi sensor core temperature probe for high precision and food safety.
- 6-point multi sensor core temperature probe for maximum precision and food safety (optional accessory).
- Remaining time estimation for probe-driven cycles based on artificial intelligence techniques (ARTE 2.0 Patented US7971450B2 and related family) for an easier planning of the activities.
- Customizable pre-cooling and pre-heating functions.
- Automatic and manual defrosting, drying and sterilizing cycle with UV lamps.
- Performance guaranteed at ambient temperatures of +43°C (Climatic class 5).
- Freezing cycle: 30 kg from 90°C up to -41°C.

Construction

- Built-in refrigeration unit.
- Solenoid valve to automatically manage the gas pressure in the thermodynamic circuit.
- Main components in 304 AISI stainless steel.
- Evaporator with antirust protection.
- Motors and fan waterproof protected IP54.
- Hygienic internal chamber with all rounded corners for easy cleaning.
- Removable magnetic gasket door with hygienic design.
- Ventilator swinging hinged panel for access to the evaporator for cleaning.
- Door stopper to keep the door open in order to avoid the formation of bad smells (kit available to be mounted on site, depending on preferred door hinge).
- Automatic heated door frame.

User Interface & Data Management

- High resolution full touch screen interface (translated in more than 30 languages) - color-blind friendly panel.
- Pictures upload for full customization of cycles.
- Make-it-mine feature to allow full personalization or locking of the user interface.
- SkyHub lets the user group the favorite functions in the homepage for immediate access.
- MyPlanner works as an agenda where the user can plan the daily work and receive personalized alerts for each task.
- With SkyDuo the Oven and the Blast Chiller are connected to each other and communicate in order to guide the user through the cook&chill process optimizing time and efficiency (requires optional accessory).
- USB port to download HACCP data, share chilling programs and configurations.
- Connectivity ready for real time access to connected appliances from remote and HACCP monitoring (requires optional accessory).
- Trainings and guidances supporting materials easily accessible by scanning QR-Code with any mobile device.
- Automatic consumption visualization at the end of the cycle.

Sustainability

- Human centered design with 4-star certification for ergonomics and usability.
- Holding at +3 °C for chilling or -22 °C for freezing, automatically activated at the end of each cycle, to save energy and maintain the target temperature (manual activation is also possible).
- Zero Waste provides chefs with useful tips for minimizing food waste.
  Zero Waste is a library of Automatic recipes that aims to:
  - give a second life to raw food close to expiration date (e.g.: from milk to yogurt)
  - obtain genuine and tasty dishes from overripe fruit/vegetables (usually considered not appropriate for sale)
  - promote the use of typically discarded food items (e.g.: carrot peels).

The company reserves the right to make modifications to the products without prior notice. All information correct at time of printing.

Included Accessories

- 1 of 3-sensor probe for blast chiller freezer — PNC 880582

Optional Accessories

- Stacking kit for 6 GN 1/1 oven on 6 GN 1/1 blast chiller freezer - 100mm height — PNC 880565 ❑
- 6-sensor probe for blast chiller freezer — PNC 880566 ❑
- Kit of 3 single sensor probes for blast chiller/freezers — PNC 880567 ❑
- Worktop for 6 GN 1/1 blast chiller freezer — PNC 880581 ❑
- 3-sensor probe for blast chiller freezer — PNC 880582 ❑
- Stacking kit for 6 GN 1/1 previous oven on 6 GN 1/1 new blast chiller freezer - 100mm height — PNC 880586 ❑
- 5 stainless steel runners for 6 & 10 GN 1/1 blast chiller freezer — PNC 880587 ❑
- Flanged feet for blast chiller freezer — PNC 880589 ❑
- 4 wheels for blast chiller tower execution with oven — PNC 880676 ❑
- 4 wheels for blast chiller freezer — PNC 881284 ❑
- Pair of AISI 304 stainless steel grids, GN 1/1 — PNC 922017 ❑
- Pair of grids for whole chicken (8 per grid - 1,2kg each), GN 1/1 — PNC 922036 ❑
- AISI 304 stainless steel grid, GN 1/1 — PNC 922062 ❑
- Grid for whole chicken (4 per grid - 1,2kg each), GN 1/2 — PNC 922086 ❑
- Baking tray for 5 baguettes in perforated aluminum with silicon coating, 400x600x38mm — PNC 922189 ❑
- Baking tray with 4 edges in perforated aluminum, 400x600x20mm — PNC 922190 ❑
- Baking tray with 4 edges in aluminum, 400x600x20mm — PNC 922191 ❑
- Pair of frying baskets — PNC 922239 ❑
- AISI 304 stainless steel bakery/pastry grid 400x600mm — PNC 922264 ❑
- Grid for whole chicken (8 per grid - 1,2kg each), GN 1/1 — PNC 922266 ❑
- Kit universal skewer rack and 4 long skewers for Lenghtwise ovens — PNC 922324 ❑
- Kit universal skewer rack and 6 short skewers for Lengthwise and Crosswise ovens — PNC 922325 ❑
- Universal skewer rack — PNC 922326 ❑
- 4 long skewers — PNC 922327 ❑
- Multipurpose hook — PNC 922348 ❑
- Grid for whole duck (8 per grid - 1,8kg each), GN 1/1 — PNC 922362 ❑
- Connectivity hub (SIM) Router Ethernet + WiFi + 4G (UE) — PNC 922399 ❑
- Connectivity hub (LAN) Router Ethernet + WiFi — PNC 922412 ❑
- IoT module for OnE Connected and SkyDuo (one IoT board per appliance - to connect oven to blast chiller for Cook&Chill process). — PNC 922421 ❑
- SkyDuo Kit - to connect oven and blast chiller freezer for Cook&Chill process. The kit includes 2 boards and cables. Not for OnE Connected — PNC 922439 ❑
- Tray rack with wheels, 6 GN 1/1, 65mm pitch — PNC 922600 ❑
- Tray rack with wheels, 5 GN 1/1, 80mm pitch — PNC 922606 ❑
- Bakery/pastry tray rack with wheels 400x600mm for 6 GN 1/1 oven and blast chiller freezer, 80mm pitch (5 runners) — PNC 922607 ❑
- Trolley for slide-in rack for 6 & 10 GN 1/1 oven and blast chiller freezer — PNC 922626 ❑
- Dehydration tray, GN 1/1, H=20mm — PNC 922651 ❑
- Flat dehydration tray, GN 1/1 — PNC 922652 ❑
- Spit for lamb or suckling pig (up to 12kg) for GN 1/1 ovens — PNC 922709 ❑
- Non-stick universal pan, GN 1/1, H=20mm — PNC 925000 ❑
- Non-stick universal pan, GN 1/ 1, H=40mm — PNC 925001 ❑
- Non-stick universal pan, GN 1/1, H=60mm — PNC 925002 ❑
- Double-face griddle, one side ribbed and one side smooth, GN 1/1 — PNC 925003 ❑
- Aluminum grill, GN 1/1 — PNC 925004 ❑
- Frying pan for 8 eggs, pancakes, hamburgers, GN 1/1 — PNC 925005 ❑
- Flat baking tray with 2 edges, GN 1/1 — PNC 925006 ❑
- Baking tray for 4 baguettes, GN 1/1 — PNC 925007 ❑
- Potato baker for 28 potatoes, GN 1/1 — PNC 925008 ❑
- Non-stick universal pan, GN 1/2, H=20mm — PNC 925009 ❑
- Non-stick universal pan, GN 1/2, H=40mm — PNC 925010 ❑
- Non-stick universal pan, GN 1/2, H=60mm — PNC 925011 ❑
- Kit of 6 non-stick universal pans, GN 1/1, H=20mm — PNC 925012 ❑
- Kit of 6 non-stick universal pans, GN 1/1, H=40mm — PNC 925013 ❑
- Kit of 6 non-stick universal pan GN 1/1, H=60mm — PNC 925014 ❑

The company reserves the right to make modifications to the products without prior notice. All information correct at time of printing.

2024.10.10

SkyLine ChillS
Blast Chiller-Freezer 6GN1/1 30/30 kg with UV lamp

Front

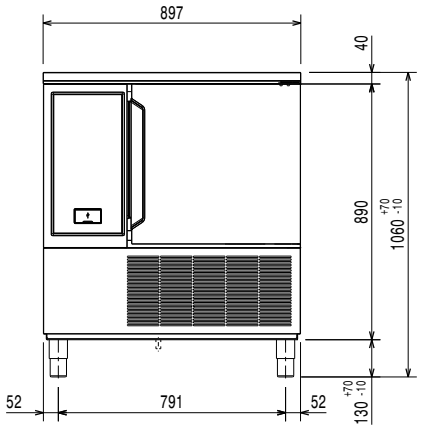

Side

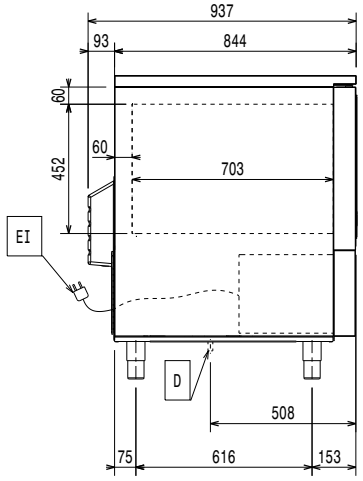

D = Drain
EI = Electrical inlet (power)

Top

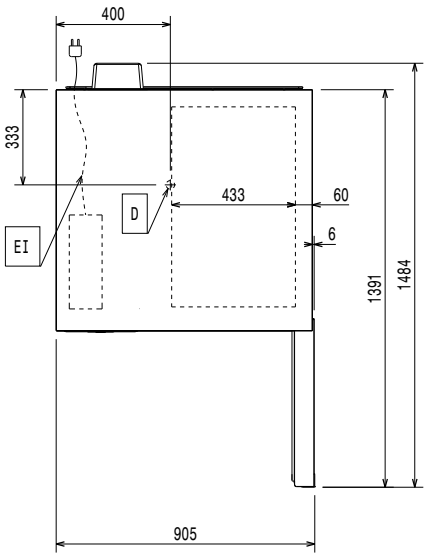

Electric

Supply voltage:	
727783 (EBFA61UTE)	380-415 V/3N ph/50 Hz
Electrical power max.:	2.7 kW
Heating power:	1 kW

Circuit breaker required

Water:

Drain line size:	1"1/2

Installation:

Clearance:	5 cm on sides and back.

Please see and follow detailed installation instructions provided with the unit

Capacity:

Max load capacity:	30 kg
Number and type of grids:	6 (GN 1/1; 600x400)
Number and type of basins:	8 (360x250x80h)

Key Information:

Door hinges:	Right Side
External dimensions, Width:	897 mm
External dimensions, Depth:	937 mm
External dimensions, Height:	1060 mm
Net weight:	175 kg
Shipping weight:	183 kg
Shipping volume:	1.28 m³

Refrigeration Data

Built-in Compressor and Refrigeration Unit

Refrigeration power at evaporation temperature:	-10 °C
Condenser cooling type:	AIR

Product Information (EN17032 – Commission Regulation EU 2015/1095)

Chilling Cycle Time (+65°C to +10° C):	74 min
Full load capacity (chilling):	30 kg
Freezing Cycle Time (+65°C to -18° C):	264 min
Full load capacity (freezing):	30 kg

Test performed in a test room at 30°C to chill/ freeze (+10°C/-18°C) a full load of 40mm deep trays filled with mashed potatoes evenly distributed up to a height of 35 mm at starting temperature between 65° and 80°C within 120/270min.

ISO Certificates

ISO Standards:	ISO 9001; ISO 14001; ISO 45001; ISO 50001

Sustainability

Refrigerant type:	R452A
GWP Index:	2141
Refrigeration power:	5390 W
Refrigerant weight:	1150 g
Energy consumption, cycle (chilling):	0.0921 kWh/kg
Energy consumption, cycle (freezing):	0.259 kWh/kg

The company reserves the right to make modifications to the products without prior notice. All information correct at time of printing.